6ème journée scientifique de l'école doctorale thématique
METAMORPHOSE
Université catholique de Louvain, Louvain-la-Neuve - 27 janvier 2012

TROPOSPHERIC NO_2 MAPPING USING DOAS FROM AN UAV

D.E. Constantin[1], A. Merlaud[2], M. Van Roozendael[2], F. Mingireanu[1,3], M. Voiculescu[1], L.P. Georgescu[1]

[1]Faculty of Sciences and Environment, "Dunarea de Jos" University of Galati, European Center of Excellence for the Environment, Domneasca Street, no. 111, Galati, Romania
[2]Belgian Institute for Space Aeronomy (BIRA-IASB), Avenue Circulaire 3, 1180 Brussels, Belgium
[3]Reev River Aerospace, Galati, Romania

ABSTRACT

We present the concept of a system for NO_2 mapping at high spatial resolution using a compact UV-VIS spectrometer onboard *an* Unmanned Aerial Vehicle (UAV). Boundary layer NO_2 columns will be retrieved using the DOAS technique. The aim of this project is to obtain NO_2 maps with a pixel size of a few hundred meters using the whiskbroom scanning geometry . This instrument will be a useful tool for data validation from satellite nadir sensors such as OMI or GOME-2 as well as for assessment of air quality models. Preliminary aspects including flight details (altitude, velocity) and signal-to-noise ratio are also considered. The first experiment is scheduled for the summer of 2012 in Romania.

About NO2

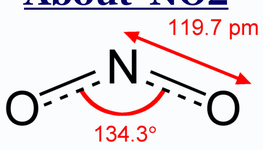

Fig.1. Skeletal formula of NO_2

The Nitrogen Dioxide (NO_2) molecule consists of two oxygen atoms each attached to a nitrogen atom by covalent bonds, having a bond length of 0.120nm.

NO_2 plays an important role in the creation and destruction of Ozone (O_3) (see below), and is known as O_3 precursor. It is also readily photolised into NO and an Oxygen atom.

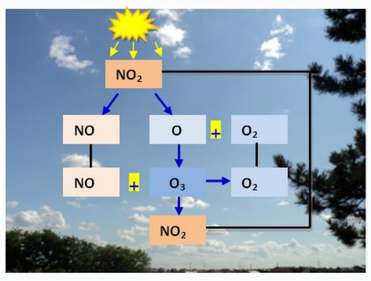

Fig. 2. Block diagram of natural cycle of NO2

The forward and backward reaction of NO_2 natural equilibrium

$NO_2 + h\nu \rightarrow NO + O$ (λ<424nm)
$O + O_2 \rightarrow O_3$
$NO + O_3 \rightarrow NO2 + O_2$

NO_2 production from CO oxidation :

$CO + OH \rightarrow CO_2 + H$
$H + O_2 + M \rightarrow HO_2 + M$
$HO_2 + NO \rightarrow OH + NO_2$
$NO_2 + h\nu \rightarrow NO + O$
$O + O_2 + M \rightarrow O_3 + M$

Natural sources of NO_2:
- Lightning
- Microbial activity in soil

Anthropogenic sources of NO_2:
- Transports
- Biomass burning
- Power generation
- Industrial processes

About DOAS

Beer-Lambert Law in the atmosphere:

$$I(\lambda) = A(\lambda) I_0(\lambda) \exp\{-L \times (\sum_{j=1}^{J} \sigma_j(\lambda) c_j + \varepsilon_R(\lambda) + \varepsilon_M(\lambda))\}$$

Instrumental effects — Several absorbers — Rayleigh and Mie scattering

Idea of DOAS: separation of broad and narrow band absorption enables quantitative analysis for some gases, e.g. NO_2.

The result of the DOAS fit is a Differential Slant Column Density (DSCD) of NO_2 which is the difference between the NO_2 SCDs of the measured spectrum and the Fraunhofer reference spectrum.

The spectrum shown in Fig. 3 was recorded from an ultra light aircraft (ULM) in limb geometry (looking to the horizon) above the Po Valley in Italy, which always shows high level of NO_2.

Software used for DOAS retrieval: **QDoas.**

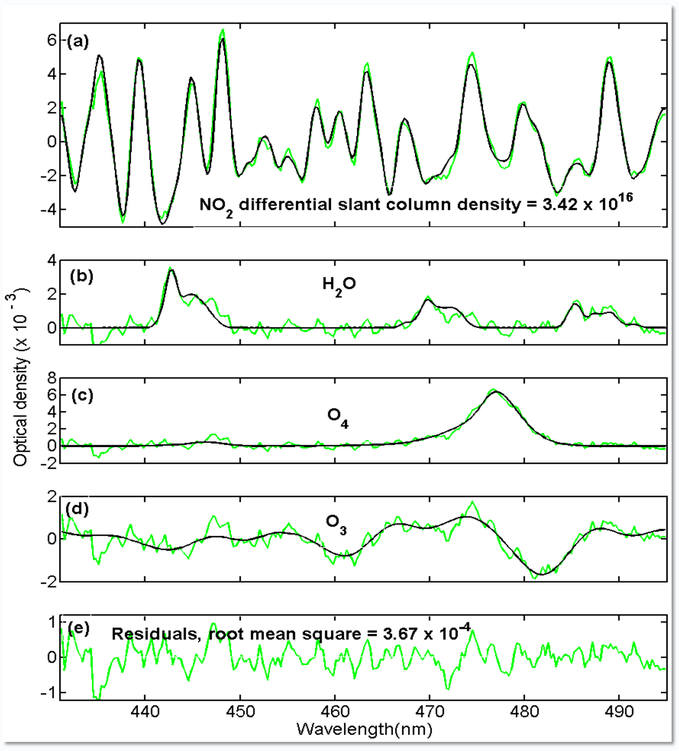

Fig. 3. Example of a NO_2 DOAS retrieval from A. Merlaud et al. paper in preparation for Atmospheric Measurements Technique, 2012

UAV DESCRIPTION

UAV Specifications:
-wing aperture :1,2-2,4m (depending on the operational requirements of the project);
-altitude:4,000 meters max, min 2-3 feet;
-cruising speed:80-100km/h;
-maximum speed:140km/h. Minimum speed:8-10km/h;
-range:10-15km package standard package extended 50km (radius may be increased in accord with the operational requirements of the project);
-autonomy:60 minutes.

Fig.4. Image of an UAV

Fig.5. Image of an UAV

SCHEMATIC SET-UP & TECHNICAL DESCRIPTION OF PAYLOAD

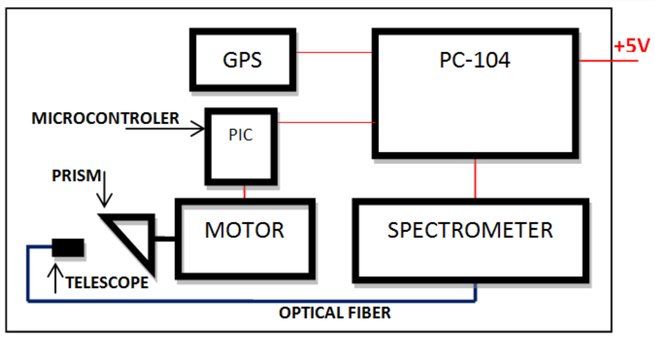

Fig. 6. Schematic set-up of payload

Spectrometer : AvaSpec 2048 USB2
Dimensions:175x110x44mm
Weight: 716 g (with no cover ~400g)
Spectral range :200-750nm
Resolution (FWHM): 1.5 nm
Focal length: 75mm
Entry slit: 50µm
Grating: 600l/mm

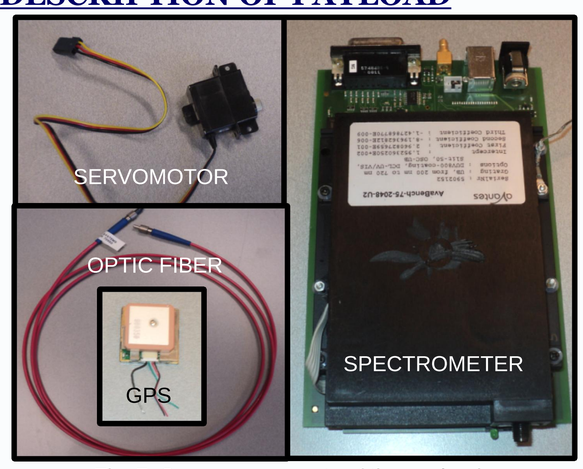

Fig. 7. Some components of the payload

Essential requirements for payload and flight experiment

Total weight: <900g
Power: <20W
Flight altitude: >2,000m
Volume: 300x75x110 mm
Flight duration: 60 minutes
Data processing: after flight.

SCANNING TYPE USED & EXAMPLE OF AN PIXEL SIZE CALCULATION

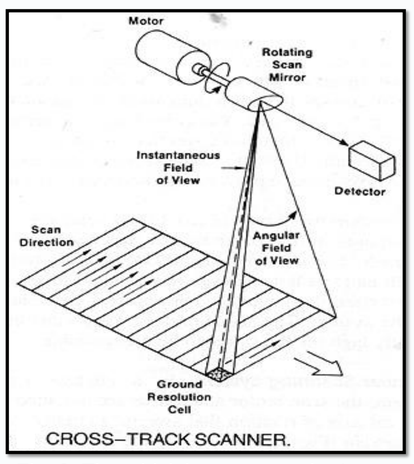

Fig. 8. The whisk broom scanning*

*From Sabins, Jr., F.F., Remote Sensing: Principles and Interpretation, 2nd Ed., W.H. Freeman

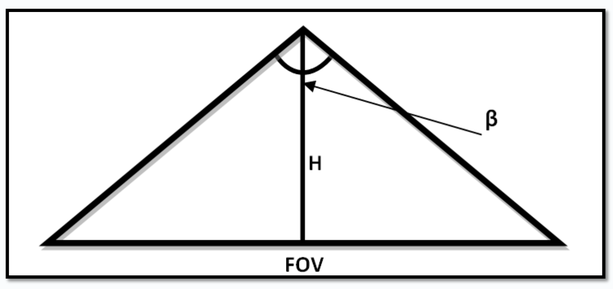

$FOV = 2*H*\tan(\beta/2)$
$Tsc = Ps/V$
$Np = FOV/Ps$
$It = Tsc/Np$

Tsc – Time of a complete scan
Ps – Pixel size
V – Speed
It – Integration time
Np – Number of pixels

Where:
H – Altitude of UAV
FOV – Field of View
β – scanning angle (120°)

Table 1.Relations between parameters used

Integration time [sec]	S/N	Altitude [m]	Swath [km]	Pixel's size [m]	Speed [km/h]	Complete scan [sec]	Number of pixels along the track
6	~10	3000	10	1000	60	60	10
4.28	8	4000	14	1000	60	60	14
1.5	~5	3000	10	500	60	30	20
1.07	4	4000	14	500	60	30	28
0.75	~3.5	3000	10	250	30	30	40
0.26	~2	4000	14	250	60	15	56
0.12	~1.5	3000	10	100	30	12	100
0.085	~1	4000	14	100	30	12	140

OMI NO2 MAP (satellite resolution 13x24km²)

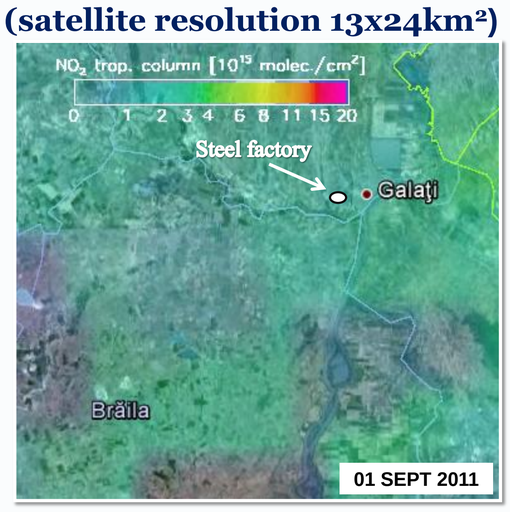

Fig. 10. The NO_2 map over Romania. OMI shows an important smoothing effect due to the size of the pixel

Vs.

HIGH RESOLUTION NO2 MAP (airborne measurements using a glider)

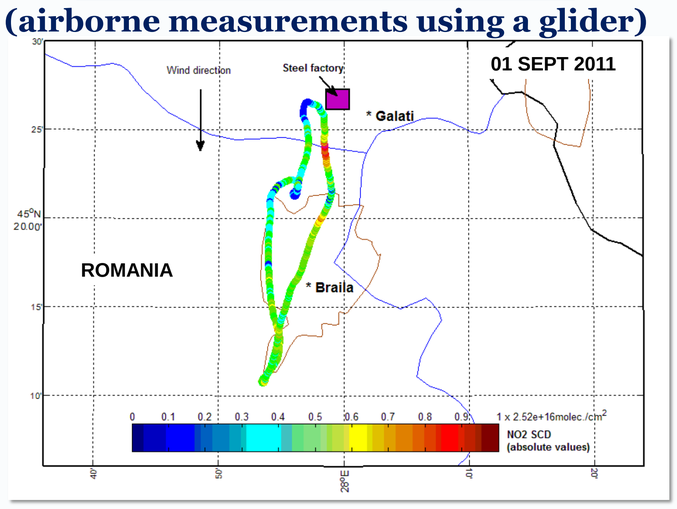

Fig. 11. The NO_2 plot from glider & DOAS experiment

Calculation of the Volume Mixing Ratio in the Boundary Layer from a Slant Column

Date:01.SEPT.2011
Time:10'00(GMT+2)
SZA=45°; BLH=1000m
$SC = 2.52e16 molec/cm^2$
$\rho_{air} = 2.42e19 molec/cm^3$

$AMF = 2.41$
$VC = 1.04e16 molec/cm^2$
$C = 1.04e11 molec/cm^3$
$VMR = 4.29e-9 molec/cm^3$
$= 4.29ppb$

$VC = SC/AMF$;
$VMR = C_{NO2} / \rho_{air}$
$C = VC/BLH$
$AMF = 1+1/\cos(SZA)$

Where:
SC – Slant Column
VC – Vertical Column
AMF – Air Mass Factor
C – Concentration
BLH – Boundary Layer Height
VMR – Volume Mixing Ratio
SZA – Solar Zenith Angle

Fig. 12. Image from glider & DOAS experiment

Acknowledgements

D.E. Constantin's work for this study was supported by the Grant SOP HRD/107/1.5/S/76822 TOP ACADEMIC co financed from ESF of EC, Romanian Government and University "Dunarea de Jos" of Galati